BOUCHARD COOPERAGES
NEW ZEALAND LTD.

OAK PORTFOLIO

2021 NEW ZEALAND

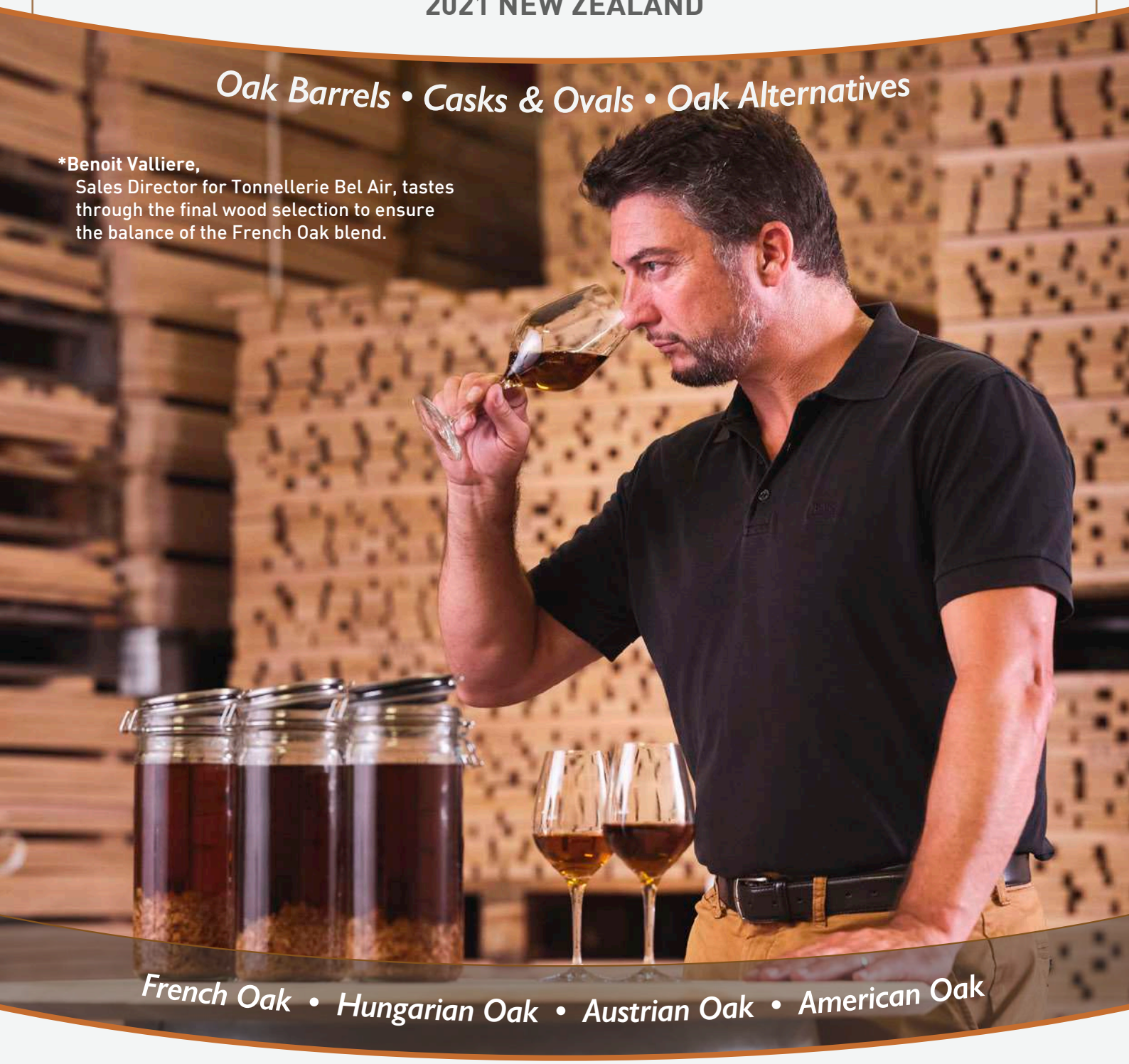

A commitment to quality and customer service

TONNELLERIE Billon BEAUNE - FRANCE

DAMY MEURSAULT - FRANCE

Bel Air tonnellerie

EUROPEAN HUNGARY COOPERS

SCHNECKENLEITNER Binderei Austria

CANADELL

www.bouchardcooperages.com • rmm@bouchardcooperages.com • Tel: 03 445 4440 • Cell: 027 424 6929

Tonnellerie
BEL AIR

FRANCE
1

HISTORY

Tonnellerie Bel Air was created in 2000 by several famous French wine producers, and is located in the prestigious region of Bordeaux. As modern winemakers look for barrels that show elegance and respect, and perform consistently every year, Bel Air sought to develop a unique wood selection method to achieve just that.

TODAY

Tonnellerie Bel Air offers barrels based on the texture and tannin profile of the wood, rather than the tightness or size of the grain. The Directors at Bel Air continually taste the wood during the ageing process in their yard to determine not only the structural category it belongs to, but also the ideal seasoning time, which changes each year depending on the weather.

It's a fascinating tasting process, quite similar to assessing young red wine, in that not only the flavours are evaluated, but also the texture and tannins of the wood on the palate.

Since 2009 Bel Air has been a part of the PEFC (Programme for the Endorsement of Forest Certification) which is the world's largest forest certification system that promotes sustainable forest management.

STYLISTICALLY

Bel Air barrels focus on the tannin structure and providing support and drive to the wine.

The barrels uplift fruit and perfume to allow the varietal to shine, without dominant oak or toast impact.

STRONG POINTS

- Bordeaux supplier of French Oak
  - Special barrel: Absolue
- Tastes wood to ensure consistency
- Stave yard located onsite
- Fire / Steam bent barrels
- Three structural categories:
  - Volupté
  - Rélévation
  - Élegance
- Offers French oak barrels and puncheons (225L – 600L)
- Bel Air barrels are used for all varietals provided the winemaker has specific goals in mind

2021 BEL AIR
New Zealand Barrel Prices

"The artisanal cooper, crafting barrels of distinction"

Product	Qty	FRENCH OAK
Bordeaux Export (225L) **Burgundy Export (228L)** 27 mm staves, 6 galvanized hoops **Bordeaux Export Thin Stave (225L)** 22 mm staves, 6 galvanized hoops	1-10 11-40 41+	860 € 849 € 836 €
Bordeaux Chateau Ferrée (225L) 22 mm staves, 8 galvanized hoops Recessed heads, bar crossing head	1-10 11-40 41+	902 € 891 € 877 €
300L Hogshead 27 mm staves, 8 galvanized hoops	1-10 11-40 41+	1,021 € 1,016 € 1,000 €
400L Puncheon 27 mm staves, 8 galvanized hoops	1-10 11-40 41+	1,167 € 1,162 € 1,151 €
500L Puncheon 27 mm staves, 8 galvanized hoops	1-10 11-40 41+	1,262 € 1,257 € 1,245 €
600L Demi-Muid 27 mm staves, 36 mm head 8 galvanized hoops	1-10 11-40 41+	1,788 € 1,783 € 1,757 €

BARREL OPTIONS

Élégance

Fine and delicate tannin structure, some softness on the palate and good length. The barrels are steam bent to remove any harsh tannins, and to promote fruit brightness and elegance.

Recommended for light whites and delicate reds.

Révélation

Gives length and drive to the wine whilst providing background support and good tannin structure. Respectful of the fruit and the varietal characteristics, encourages perfume and lift on the nose.

Recommended for full bodied whites and reds.

Volupté

More powerful staves to bring volume and structure, encourages lift in the mid palate, whilst still being respectful of the fruit and showing perfume on the nose.

Recommended for red varietals.

Absolue

Special selection of forests to combine power, finesse and elegance.

Suited to long ageing, produced in small quantities.

225L/228L	+119 €

HEAT TREATMENT

- Biosecurity NZ / MPI currently does NOT require compulsory BMSB Heat Treatment for containers originating in France or Hungary with oak products that have been individually heat treated during fabrication, unlike Australia. Should this change, additional Heat Treatment charges will be added to your invoice as a separate line item.

TOAST LEVELS

- **Light**
- **Medium**
- **Medium Long**
- **Medium Plus**

- All prices are listed in Euros (€) and include transport, duty and customs to our warehouse in Napier. For South Island and other delivery locations, please enquire. The prices do not include GST, which will be added separately to your invoice.
- Free winery delivery and price discounts are available for full container purchases.
- For Bordeaux Chateau Tradition or Burgundy Tradition, please contact us for availability and pricing.
- Black Hoops +15 € per 225L - 228L, for larger sizes please enquire.

Bel Air tonnellerie

www.bouchardcooperages.com • rmm@bouchardcooperages.com • Tel: 03 445 4440 • Cell: 0 27 424 6929

TONNELLERIE
Billon
BEAUNE - FRANCE

Tonnellerie BILLON

1
FRANCE

HISTORY

Tonnellerie Billon was created in 1947 by Gaston Billon, is located in Beaune and produces premium traditional forest origin barrels, puncheons and casks (225L - 820L) sourced from different French forests.

TODAY

Tonnellerie Billon is managed by Vincent Damy, who was awarded the prestigious "Meilleur Ouvrier de France" in 2007. Tonnellerie Billon along with sister company Tonnellerie Damy form Les Tonnelleries de Bourgogne or translated "The Cooperages of Burgundy", one of the few suppliers still able to offer oak selection by forest origin.

Since 1997 barrels produced at Billon are CTB certified (fûts de traditions Française- traditional French barrels).

This unique label ensures a high quality barrel's traceability, drying, technical features and respect for tradition.

Tonnellerie Billon is part of the PEFC (Programme for the Endorsement of Forest Certification) which is the world's largest forest certification system that promotes sustainable forest management.

STYLISTICALLY

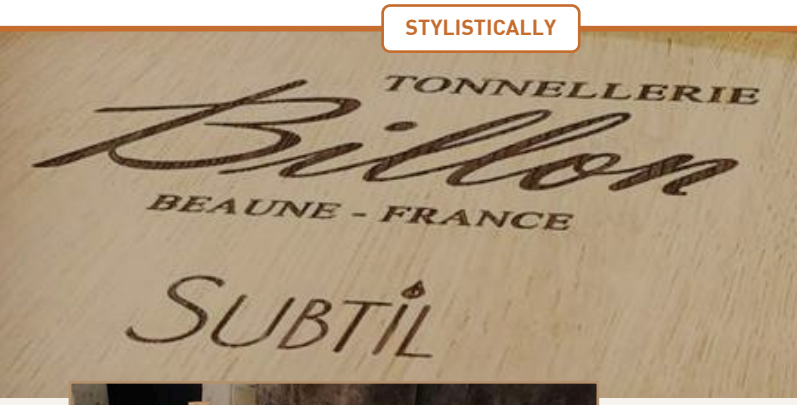

Billon barrels are most well known for respecting the wine and being true to the varietal by showcasing the fruit on the nose and palate as well as offering tremendous length and enhanced minerality.

STRONG POINTS

- Forest origin and special barrels
  - Special barrels: Select and Richelieu
- Partnered with stave mill in the Jura region of France:
  - Merrains du Jura
- Independently owned and part of Les Tonnelleries de Bourgogne
- Fire bent or steam bent and fire toasted barrels
- Offers French acacia barrels
- Offers French oak barrels, puncheons and casks (225L - 820L)

NEW

SUBTIL | Optional pre-toasting technique

2021 BILLON
New Zealand Barrel Prices

BILLON AND DAMY BARRELS CAN BE COMBINED FOR VOLUME PRICE DISCOUNTS.

FRENCH OAK
(24 MONTH AIR DRY)

Product	Qty	Early Order (by October 15)	Late Order
Bordeaux Export (225L)	1-10	853 €	873 €
Burgundy Export (228L)	11-30	843 €	863 €
25/27 mm staves, 6/8 galvanized hoops	31-67	831 €	851 €
	68-1C	825 €	845 €
300L Puncheon	1-10	1,023 €	1,043 €
25/27 mm staves, 8 galvanized hoops	11-30	1,012 €	1,032 €
	31-50	999 €	1,019 €
	51-1C	982 €	1,002 €
500L Puncheon	1-5	1,478 €	1,498 €
30/32 mm staves, 8 galvanized hoops	6-15	1,466 €	1,486 €
	16-25	1,455 €	1,475 €
	26-1C	1,449 €	1,469 €

		FRENCH ACACIA	AMERICAN OAK
Product	**Qty**	**24 Months Air Dry**	**36 Months Air Dry**
Bordeaux Export (225L)	1-10	768 €	620 €
Burgundy Export (228L)	11-30	759 €	608 €
25/27 mm staves, 6/8 galvanized hoops	31-67	751 €	602 €
	68-1C	740 €	595 €
300L Puncheon	1-10	906 €	730 €
25/27 mm staves, 8 galvanized hoops	11-30	897 €	717 €
	31-50	883 €	700 €
	51-1C	868 €	692 €
500L Puncheon	1-5	1,360 €	1,027 €
30/32 mm staves, 8 galvanized hoops	6-15	1,352 €	1,015 €
	16-25	1,346 €	1,010 €
	26-1C	1,334 €	1,004 €

BARREL CASKS

Product	600L	700L	820L
32 mm staves, 8 galvanized hoops	1,827 €	1,800 €	2,078 €
45 mm staves, 8 galvanized hoops	2,188 €	2,576 €	-

BARREL OPTIONS

Name	225-228L	300-500L	600-820L
Billon Subtil	+15 €	-	-
Head Toasting (All forests)	+10 €	+14 €	+21 €
3 Year Air Dry (All forests)	+22 €	+24 €	+52 €
Black Hoops	+22 €	+57 €	-

DELIVERY OPTIONS

Margaret River (Winery)	Greater Western Australia (Winery)	Hunter Valley (Winery/Warehouse)
+15€	+20€	+15€

SUBTIL

A proprietary pre-toasting technique unique to Tonnellerie Billon that aims to remove the harsher tannins and organoleptic material from the wood in order to have faster integration and a more subtle impact of the oak and toast. This technique maintains Billon's signature long finish and lift on the palate.

225/228L	300L
+81 €	+94 €

Select

Special selection of Extra Tight Grain from a blend of French forests, minimum of 30 months air dry, intended for longer aging.

225/228L	300L	500L
+93 €	+109 €	+155 €

Richelieu

A unique blend of oak from small micro climates within three of the finest forests in France. One forest contributes a noted minerality, another imparts structure, texture and spice, while the third brings softness, freshness and elegance.

Its proprietary toasting was developed specifically for bolder red varietals and blends.

Minimum of 3 year air-dried staves, and 4 year air-dried heads.

225/228L	300L	500L
+81 €	+94 €	+133 €

FOREST ORIGIN	TOAST LEVELS
Allier	**Light**
Vosges	**Light Long**
Nevers	**Medium**
Jura	**Medium Long**
Chatillon	**Medium Plus**
Bourgogne	**Heavy**
Eastern Europe	
*Offered at -90€	

- Exclusive forest orgins such as Troncais, Bertranges, Jupilles and Citeaux are available for an additional charge.

TONNELLERIE Billon
BEAUNE ▪ FRANCE

All prices are listed in Euros (€) and exclude GST. Prices include duty, customs, BSMB heat treatment charges and transport to our warehouse in Adelaide or Melbourne. To qualify for the Early Order price, orders must be confirmed by October 15, 2021. Free winery delivery and price discounts for full container purchases. Please enquire.

www.bouchardcooperages.com
rmm@bouchardcooperages.com
Tel: 03 445 4440 • Cell: 0 27 424 6929

DAMY
MEURSAULT - FRANCE

Tonnellerie DAMY

1
FRANCE

HISTORY

Tonnellerie Damy is a third generation cooperage located in Meursault, Burgundy that was founded in 1946 by M. Roger Damy and produces premium traditional forest origin barrels, puncheons and casks (225 L - 860 L) sourced from different French forests.

TODAY

Tonnellerie Damy is now managed by Jérôme Damy who, like his father Jacques Damy in 1976, was awarded the Meilleur Ouvrier de France award in 2007.

Tonnellerie Damy along with sister company Tonnellerie Billon form Les Tonnelleries de Bourgogne or translated "The Cooperages of Burgundy", one of the few suppliers still able to offer oak selection by forest origin.

Since 1997 barrels produced at Damy are CTB certified (fûts de traditions Française - French barrels) traditional which is a unique label, ensuring a high quality barrel's traceability, drying, technical features and respect for tradition.

Tonnellerie Damy is part of the PEFC (Programme for the Endorsement of Forest Certification) which is the world's largest forest certification system that promotes sustainable forest management.

Tonnellerie Damy is one of the most renowned Burgundian Cooperages. The barrels are synonymous with the world's greatest Chardonnays and Pinots and are featured in many Côtes de Beaune and Nuits domaines. The distinctive and delectable house style is the reason you will find Damy barrels in many wineries around the world.

STYLISTICALLY

Damy barrels have a stunning ability to soften tannins and provide a creamy, rounded mid-palate, whilst supporting and enhancing fruit sweetness to complement both white and red wines with a variety of forest origins.

STRONG POINTS

- Forest origin and special barrels
  - Special barrels: Rouge, R2 and Exclusive
- Partnered with stave mill in the Jura region of France:
  - Merrains du Jura
- Independently owned and part of Les Tonnelleries de Bourgogne
- Fire bent and fire toasted barrels
- Offers French oak barrels, puncheons and casks (225L - 860L)

Merrains du Jura

PEFC

NEW

Délicat | Optional barrel finishing technique

ALSO NEW
Light Long Plus Plus
Toast

2021 DAMY
New Zealand Barrel Prices

BILLON AND DAMY BARRELS CAN BE COMBINED FOR VOLUME PRICE DISCOUNTS.

FRENCH OAK
(24 MONTH AIR DRY)

Product	Qty	Early Order (by October 15)	Late Order
Bordeaux Export (225L)	1-10	853 €	873 €
Burgundy Export (228L)	11-30	843 €	863 €
25/27 mm staves,	31-67	831 €	851 €
6/8 galvanized hoops	68-1C	825 €	845 €
300L Puncheon	1-10	1,023 €	1,043 €
	11-30	1,012 €	1,032 €
25/27 mm staves,	31-50	999 €	1,019 €
8 galvanized hoops	51-1C	982 €	1,002 €
500L Puncheon	1-5	1,478 €	1,498 €
	9-15	1,466 €	1,486 €
30/32 mm staves,	16-25	1,455 €	1,475 €
8 galvanized hoops	26-1C	1,449 €	1,469 €

AMERICAN OAK
(36 MONTH AIR DRY)

Product	Qty	All Season
Bordeaux Export (225L)	1-10	620 €
Burgundy Export (228L)	11-30	608 €
25/27 mm staves,	31-67	602 €
6/8 galvanized hoops	68-1C	595 €
300L Puncheon	1-10	730 €
	11-30	717 €
25/27 mm staves,	31-50	700 €
8 galvanized hoops	51-1C	692 €
500L Puncheon	1-5	1,027 €
	9-15	1,015 €
30/32 mm staves,	16-25	1,010 €
8 galvanized hoops	26-1C	1,004 €

FRENCH OAK CASKS

Product	600L	700L	860L
32 mm staves, 8 galvanized hoops	1,827 €	1,800 €	2,207 €
45 mm staves, 8 galvanized hoops	2,188 €	2,576 €	2,685 €

BARREL OPTIONS

Name	225/228L	300-500L	600-820L
DAMY Délicat	+15 €	+18 €	-
Head Toasting (All forests)	+10 €	+14 €	+21 €
3 Year Air Dry (All forests)	+22 €	+24 €	+52 €
Black Hoops	+22 €	+57 €	-

DELIVERY OPTIONS

Product	225L/300L	500L
Margaret River (Winery)	+15€	+15€
Greater Western Australia (Winery)	+20€	+20€
Hunter Valley (Winery/Warehouse)	+35€	+45€

Délicat

A proprietary barrel finishing technique unique to Tonnellerie DAMY that aims to soften the initial presence of the oak and elevate the integration and harmony between the fruit, oak and toast. This technique maintains DAMY's signature mid-palate volume and roundness.

Dèlicat

225/228L	300L	500L
+62 €	+94 €	+103 €

EXCLUSIVE

Limited quantities. Created especially for powerful, grand-cru style wines. Extra tight grain from a melange of the finest French forests. Optimal seasoning and proprietary toast. Brings a restrained, fruit-forward elegance.

Exclusive

225/228L	300L
+62 €	+94 €

R / R2

A hand-selected blend of extra tight grain French oak all sourced from one long term respected supplier. 36 months seasoning. Proprietary Toast. A stronger end toast is used to help develop structure in bolder red wines

Rouge (R or R2)

225/228L	300L	500L
+93 €	+ 109 €	+155 €

FOREST ORIGIN	TOAST LEVELS
Allier	**Light**
Vosges	**Light Long**
Nevers	**Light Long Plus**
Jura	**Medium**
Chatillon	**Medium Long**
Bourgogne	**Medium Plus**
Eastern Europe	**Heavy**
*Offered at -90€	

- Exclusive forest orgins such as Tronçais, Bertranges, Jupilles and Citeaux are available for an additional charge.

DAMY
MEURSAULT ▪ FRANCE

All prices are listed in Euros (€) and exclude GST. Prices include duty, customs, BSMB heat treatment charges and transport to our warehouse in Adelaide or Melbourne. To qualify for the Early Order price, orders must be confirmed by October 15, 2021. Free winery delivery and price discounts for full container purchases. Please enquire.

www.bouchardcooperages.com
rmm@bouchardcooperages.com
Tel: 03 445 4440 • Cell: 0 27 424 6929

EUROPEAN HUNGARY COOPERS

EUROPEAN COOPERS
Hungary

HUNGARY

1

HISTORY

European Coopers Hungary is a premium Hungarian cooperage that produces Hungarian oak barrels (225 L - 500 L). The cooperage is located two hours south of Budapest and is proud of remaining independent since its establishment in 1997. With over forty years of experience, Master Cooper Kristof Flodung has been at the heart of European Coopers Hungary since day one in 1997.

TODAY

European Coopers Hungary was co-founded by three respected Italian winemaking families that were searching for premium Hungarian oak for their wines. Vincent Bouchard is involved as a consultant on toasting and barrel technicalities.

After opening its markets and becoming part of the EU in 2004, there has been a resurgence in demand for Hungarian oak on the international wine scene.

European Coopers Hungary produces premium Hungarian oak barrels that are everything you would expect from a quality-driven artisan cooper.

Kristof and his team control the entire process in house, from sourcing and selecting 100% Hungarian logs from Hungary's best forests in the Zemplen and Mecsek hills, to seasoning the staves, and producing and finishing the barrels.

STYLISTICALLY

European Coopers Hungary barrels are either coopered exclusively with oak from the forests of Tokay, Mecsek or a blend of both forests.

Tokay offers elegance and a fine tannin profile while Mecsek offers phenolic richness and palate weight.

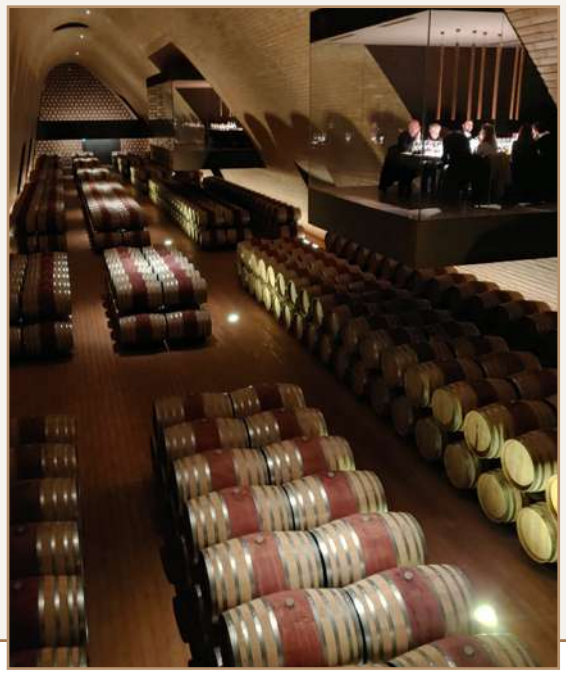

STRONG POINTS

- Hungarian oak barrels and a special barrel
  - Special barrel: Kristof
- The sourcing, cutting, splitting and ageing of the wood and coopering of the barrel is all done internally
- Independently owned cooperage
- Only 3-Year air dried oak
- Fire bent and fire toasted barrels
- European Coopers Hungary purchases logs from parts of the Mecsek and Tokay forests that have the FSC certificate and the Natura 2000 certificate which both promote sustainable forest management.
- Offers Hungarian oak barrels and puncheons (225 L - 500 L)
- Recommended for: Sauvignon Blanc, Pinot Gris, Shiraz, Merlot

FSC

2021 EUROPEAN COOPERS
New Zealand Barrel Prices

Product	Qty	HUNGARIAN OAK (36 MONTHS AIR DRY)
Bordeaux Export (225L) **Burgundy Export (228L)** 25/27 mm staves, 6/8 galvanized hoops	1-10	622 €
	11-30	613 €
	31-67	603 €
	68-1C	582 €
300L Hogshead 25/27 mm staves, 6/8 galvanized hoops	1-10	711 €
	11-30	702 €
	31-50	694 €
	51-1C	665 €
400L Puncheon 27 mm staves, 8 galvanized hoops	1-8	936 €
	9-16	921 €
	17-25	907 €
	26-1C	875 €
500L Puncheon 27 mm staves, 8 galvanized hoops	1-8	1,095 €
	9-16	1,081 €
	17-25	1,066 €
	26-1C	1,035 €

Kristof **+50 €**

Named for Master Cooper Kristof Flodung, the Kristof barrel is a blend of extra tight grain from the finest selections of Mecsek and Tokay. The staves are aged for a minimum of 3 years and the heads 4–5 years. All three toasting options are finished with a proprietary process developed for deeper penetration, subtlety and elegance.

(Available from 225L & 228L - 500L)

DELIVERY OPTIONS

Product	225L/300L	500L
Melbourne (Warehouse)	+25€	+35€
Hunter Valley (Winery/Warehouse)	+35€	+45€
Perth (Warehouse)	+60€	+75€

OAK SELECTIONS

Name	Forest Origin	Grain Width	Air Dry
Tokay	Tokay Mountains	‹ 1.5 mm	36 months
Tokay Blend	2/3 Tokay, 1/3 Mecsek	1.5-2.0 mm	36 months
Hungarian	Blend of Tokay and Mecsek	1.5-3.0mm	36 months
Mescek Blend	1/3 Tokay, 2/3 Mecsek	2.0-3.0 mm	36 months
Mescek	Mecsek Hills	2.0-3.0 mm	36 months

SPECIAL SIZES

Size	Price
60L	280
110L	362
600L	1,099

BARREL OPTIONS

Name	225/228L	300-500L
Head Toasting	+10 €	+13 €
Tokay Oak (extra fine grain)	+22 €	+30€
2/3 Tokay Oak Selection	+11 €	+13 €
Kristof	+50 €	+50 €

TOAST LEVELS

- **Light**
- **Light Long**
- **Medium**
- **Medium Long**
- **Medium Plus**
- **Heavy**

EUROPEAN HUNGARY COOPERS

All prices are listed in Euros (€) and exclude GST.
Prices include duty, customs, BSMB heat treatment charges and transport to our warehouse in Adelaide.
Free winery delivery and price discounts for full container purchases. Please enquire.

www.bouchardcooperages.com
rmm@bouchardcooperages.com
Tel: 03 445 4440 • Cell: 0 27 424 6929

Fassbinderie SCHNECKENLEITNER

1 AUSTRIA

HISTORY

Fassbinderie Schneckenleitner is a fifth generation Austrian artisan family-run cooperage that is located in Waidhofen/Ybbs, located in the foothills of the Austrian Alps.

The cooperage was founded in 1628, and the Schneckenleitner family has been at the helm of the cooperage since 1880. Schneckenlietner produces premium quality large format vessels, and they are best known for their ovals and casks or rounds as they call them. The oak for these ovals and rounds (10 HL - 60 HL) are either sourced 100% in Austria or are made from a mix of Eastern European oak.

TODAY

Fassbinderie Schneckenleitner is managed by Paul Schneckenleitner, who is a fifth generation Master Cooper from the Schneckenleitner family. Before managing the family cooperage, Paul gained invaluable experience by working in several Burgundy and Cognac based cooperages.

Schneckenleitner buys entire oak logs from forests they have been working with for generations. The logs are brought to their production site and the splitting, preparing and air drying of the wood is done on site. They offer two different assortments of 100% Austrian oak. The first is Manhartsberg / Ybbstal oak, which comes from a forest next to the Kamptal winemaking region next to Vienna. They also cooper vessels made from tight grain Weilding Oak that is sourced from forests in southern Austria.

STYLISTICALLY

Schneckenleitner has built their reputation on the production of their large format ovals and puncheons which are found in many of Europe's finest cellars.

Because of the large format, the incredibly long and low toast, and significantly long air-drying time results in extremely low impact ovals, rounds and puncheons that respect the wine's fruit, freshness and minerality, while allowing for some natural micro-oxidation to occur. Their large format vessels work both on white and red wines.

STRONG POINTS

- Independently family-owned artisanal cooper where all important steps are still done by hand
- Reputation built on 10HL - 60HL+ Ovals and Rounds
- Also coopers 45 mm thick stave puncheons and conicals
- Directly buys and handles logs at stave mill located at the cooperage
- Air drying of oak is done on site
- Selection of 100% Austrian oak: Manhartsberg / Ybbs or Weidling Oak
- Long air drying time for wood preparation
- House toasts are the: AOC (Austrian Oak Complex) and AOE (Austrian Oak Elegance)

2021 SCHNECKENLEITNER
New Zealand Barrel Prices

CASKS	LITRES (L)	29mm STAVE THICKNESS	45mm STAVE THICKNESS
500L	500	1,990 €	2,460 €
600L	600	2,250 €	2,780 €
700L	700	2,545 €	3,100 €
800L	800	2,840 €	3,395 €

ROUNDS	LITRES (L)	BILGE HEIGHT (CM)	BILGE DIAMETER (CM)	HEAD HEIGHT (CM)	HEAD DIAMETER (CM)	WEIGHT (KGS)	LENGTH OF STAVES (CM)	STAVE THICKNESS (MM)	MANN/YBBS OR ACACIA	WEIDLING OAK
10HL	1000	49.2	49.2	2.9	47	264	51.2	47	9,080 €	9,290 €
13HL	1300	53.5	53.5	46.1	47	343	54.7	47	10,275 €	10,545 €
15HL	1500	55.1	55.1	48.4	50	396	59.1	50	11,035 €	11,350 €
20HL	2000	60.6	60.6	53.5	52	528	63.4	52	13,015 €	13,435 €
25HL	2500	65.7	65.7	57.9	57	660	68	57	15,115 €	15,640 €
30HL	3000	69.6	69.6	61.4	60	793	72	60	16,995 €	17,620 €
OVALS										
10HL	1000	264	49.2	49.2	42.9	47	51.2	47	9,250 €	9,460 €
13HL	1300	343	53.5	53.5	46.1	47	54.7	47	10,215 €	10,475 €
15HL	1500	396	55.1	55.1	48.4	50	59.1	50	11,240 €	11,555 €
20HL	2000	528	60.6	60.6	53.5	52	63.4	52	13,305 €	13,725 €
25HL	2500	660	65.7	65.7	57.9	57	68	57	15,430 €	15,955 €
30HL	3000	793	69.6	69.6	61.4	60	72	60	17,375 €	18,000 €

OVAL WITH STANDARD ACCESSORIES

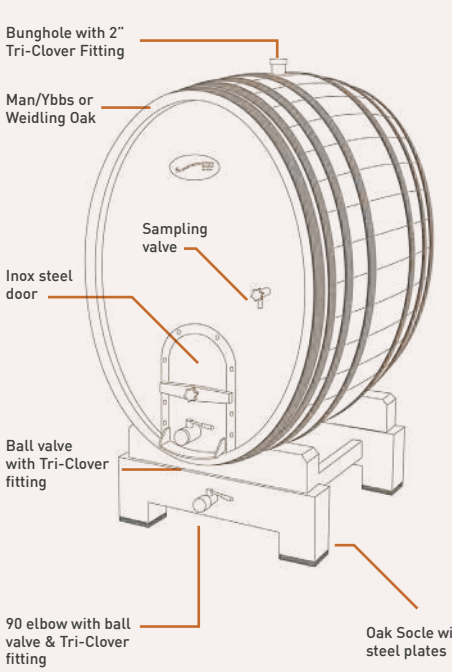

- Oval vertical/horizontal door available upon request.
- Additional sizes from 500L up to 60HL available on request, as well as conical upright tanks for aging and maturation.

CASK & OVAL OPTIONS

500L - 800L OPTIONS	
Outlet Connection 1" with cap	105 €
Wooden Cradle	445 €
10HL - 60HL OPTIONS	
Top Manhole with TC fitting and pressure compensating valve	Varies on size
Painted Hoops	489 €
Cooling Plate	Varies on size
Laser Engraving	390 €
Colmatore	188 €
Thermometer with immersion sleeve	390 €
Thermometer without immersion sleeve	165 €
1x Oak Support Bar on Head	495 €
2x Oak Support Bar on Head	950 €

OAK SELECTIONS

Manhartsberg/Ybbstal oak

A local forest located in the Kamptal wine growing region next to Vienna

Weidling oak

Selection of fine grain oak from a forest in Southern Austria

TOAST LEVELS

AOC

Austrian Oak Complex which is slightly bolder and more structural on the palette

AOE

Austrian Oak Elegance which is a slightly softer, more transparent and showcases more fruit and removes more tannin from the wood

SCHNECKENLEITNER Binderei Austria

All prices listed are in Euros (€), and exclude GST. Prices include transport, heat treatment, duty and customs to our warehouse in Adelaide. For deliveries to your winery outside of South Australia, please contact us.
Your invoice will be in $AUD based on the exchange rate at the date of invoice.
30% deposit due at the Order Confirmation with 70% balance due before delivery to the winery.

www.bouchardcooperages.com
rmm@bouchardcooperages.com
Tel: 03 445 4440 • Cell: 0 27 424 6929

CANADELL

Tonnellerie CANADELL

FRANCE 1

HISTORY

Merrandier Canadell was established in 1940 by Lauriano Canadell in Trie-sur-Baîse in France's Hautes Pyrénées department. For four generations and over sixty years, Canadell has been providing staves of the highest quality to the largest and most prestigious cooperages around the world for barrel making. In 2000 Canadell launched their own line of fine oak alternative products for winemaking which include Chips, Dominoes and Staves.

TODAY

Canadell is currently managed by Jacques Canadell and his son Frédéric. Canadell is one of the oldest and largest customers of France's Office National des Forêts (ONF).

With two stave mills in France and connections to France's most prestigious forests, Canadell uses strict proprietary toasting regimens to carefully craft a complete line of oak alternatives.

Canadell oversees the entire manufacturing process of its oak alternative products for full traceability, from selecting trees in the forest to seasoning, splitting, air drying, toasting and the final packaging of the product. Canadell is part of the PEFC (Programme for the Endorsement of Forest Certification) which is the world's largest forest certification system that promotes sustainable forest management.

STYLISTICALLY

The Canadell product line includes powder and chips for use during fermentation and post ferment aging, to dominoes and staves, which best showcase the qualities of French oak and show characters remarkably similar to barrel aging.

Canadell bridges the gap between barrels and oak alternatives.

STRONG POINTS

- Company historically is a merrandier, ensuring control of its oak alternative product line from the source: the oak tree
- Complete in house integration from when oak is cut to packaging
- Independently owned
- Large selection of alternative products and toast levels
- Fire and Convection Toasted Staves
- Chips
- Dominoes

PEFC

2021 CANADELL
New Zealand Barrel Prices

FRENCH OAK CHIPS			< 1 PALLET	1 PALLET	2-5 PALLETS	6+ PALLETS
French Oak Chips HIGH IMPACT Made from Toasted Staves 10 kg per bag 60 bags per pallet	**Toasted (L, M , M+)**	Per bag Per kg	$82.00 $8.20	$78.00 $7.80	$75.00 $7.50	$72.00 $7.20
French Oak Chips MATRIX Proprietary Blend of Chips & Mini-Chips 10 kg per bag 60 bags per pallet	**Toasted (L, M , M+)**	Per bag Per kg	$82.00 $8.20	$78.00 $7.80	$75.00 $7.50	$72.00 $7.20
	Fresh	Per bag Per kg	$79.00 $7.90	$75.00 $7.50	$72.00 $7.20	$69.00 $6.90

FRENCH OAK TANK STAVES			< 1 PALLET	1 PALLET	2-5 PALLETS	6+ PALLETS
Standard Staves 1,090 cm² per fan 50 staves per fan 2 fans per bag 100 bags per pallet	**Toasted (L, M , M+)**	Per bag Per fan	$214.00 $107.50	$204.00 $102.00	$190.00 $95.00	$181.00 $90.50
	Long Toast	Per bag Per fan	$230.00 $115.00	$219.00 $109.50	$204.00 $102.00	$194.00 $97.00
	Fire Toasted (M , M+)	Per bag Per fan	$334.00 $117.00	$318.00 $159.00	$295.00 $147.50	$281.00 $140.50
Thick Staves 1,270 cm² per fan 25 staves per fan 2 fans per bag 100 bags per pallet	**Thick Staves (Long Toast)**	Per bag Per fan	$237.00 $118.50	$225.00 $112.50	$209.00 $104.50	$199.00 $99.50

FRENCH OAK DOMINOES			< 1 PALLET	1 PALLET	2-5 PALLETS	6+ PALLETS
41.2 cm² each 10 kg per bag 60 bags per pallet	**Toasted (L, M , M+)**	Per bag Per kg	$183.00 $18.30	$174.00 $17.40	$164.00 $16.40	$156.00 $15.60

- All Canadell products are sold and invoiced per bag or per packet.
- Untoasted products are labelled as "Fresh Oak" to comply with Australian customs and quarantine.
- Powder, Mini Chips, Chips and Fans are available for custom orders, please contact us for pricing.
- All Canadell products can be combined for volume price discounts.
- For further information on trials, specifications or dosages, please contact us.

CANADELL

All prices listed are in $AUD and exclude GST.
Prices include duty, customs, BSMB heat treatment charges and transport to our warehouse in Adelaide.
Bulk pricing available upon request.

www.bouchardcooperages.com
rmm@bouchardcooperages.com
Tel: 03 445 4440 • Cell: 0 27 424 6929

FUTAIE GROWTH MAP

Oak Tree Categories and Life Stages

*This custom graphic is property of Bouchard Cooperages.

OAK CATEGORY	SEMIS	FOURRE	GAULIS	PERCHIS	JEUNE FUTAIE	FUTAIE ADULTE	FUTAIE ADULTE
AVERAGE DENSITY (TREES/HA)	1 MILLION	600,000	60,000	30,000	400	250	120
SILIVICULTURE OPERATION	CLEARANCES	THINNING/ DIVISIONS	CLEANING	THINNING	THINNING	REGENERATION CUTS	RISK THAT TREE BEGINS TO DIE FROM THE INSIDE

Suppression of competing vegetation while preserving the diversity of forest species.

Progressive widening of space between trees for better growth and allowing access for maintenance work, sanitary surveillance and protection of the environment during operations.

Progressive thinning of trees to ensure better growth and mixing of different species.

Regular cuts for tree improvement and the harvesting of diseased, struggling, or dead trees.

Progressive harvestingof mature trees that favors the natural planting and renewal of the mature tree stand.

Risk exists at the age of 200+ years that oak trees start to naturally die from the inside out.

www.bouchardcooperages.com • 08 8346 2644 • enquiries@bouchardcooperages.com

FOREST ORIGINS

FRENCH FORESTS

1.	Jupilles/Bercé	5,400 ha
2.	Bellême	2,400 ha
3.	Blois	2,800 ha
4.	Limousin	568,000 ha
5.	Allier	122,000 ha
6.	Tronçais	10,500 ha
7.	Fountainebleau	17,000 ha
8.	Nevers	225,000 ha
9.	Bertranges	10,000 ha
10.	Ardennes	36,140 ha
11.	Chatillon	9,000 ha
12.	Cîteaux	13,284 ha
13.	Vosges	280,000 ha
14.	Jura	180,000 ha

*ha = generalized hectares of forest that includes other trees besides oak.

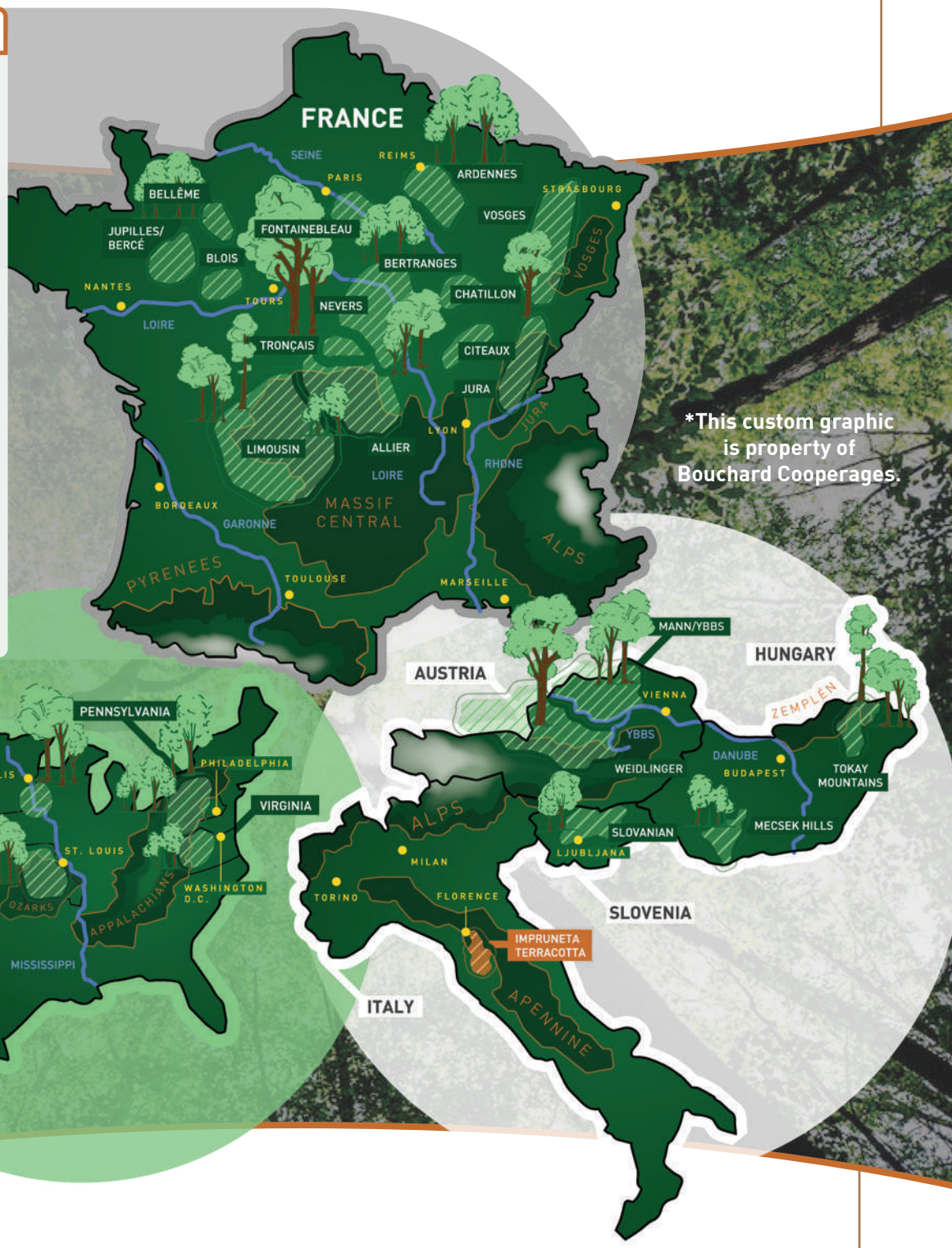

*This custom graphic is property of Bouchard Cooperages.

www.bouchardcooperages.com • 08 8346 2644 • enquiries@bouchardcooperages.com

BOUCHARD COOPERAGES
NEW ZEALAND LTD.

Proudly Representing

OAK BARRELS • CASKS & OVALS • OAK ALTERNATIVES

TONNELLERIE Billon BEAUNE - FRANCE
DAMY MEURSAULT - FRANCE
Bel Air tonnellerie
EUROPEAN HUNGARY COOPERS
SCHNECKENLEITNER Binderei Austria
CANADELL

JARRES • EGGS • AMPHORAE

Vin et Terre
DRUNK TURTLE ®
ANTICA FORNACE MONTECCHIO FIRENZE COTTO D'IMPRUNETA

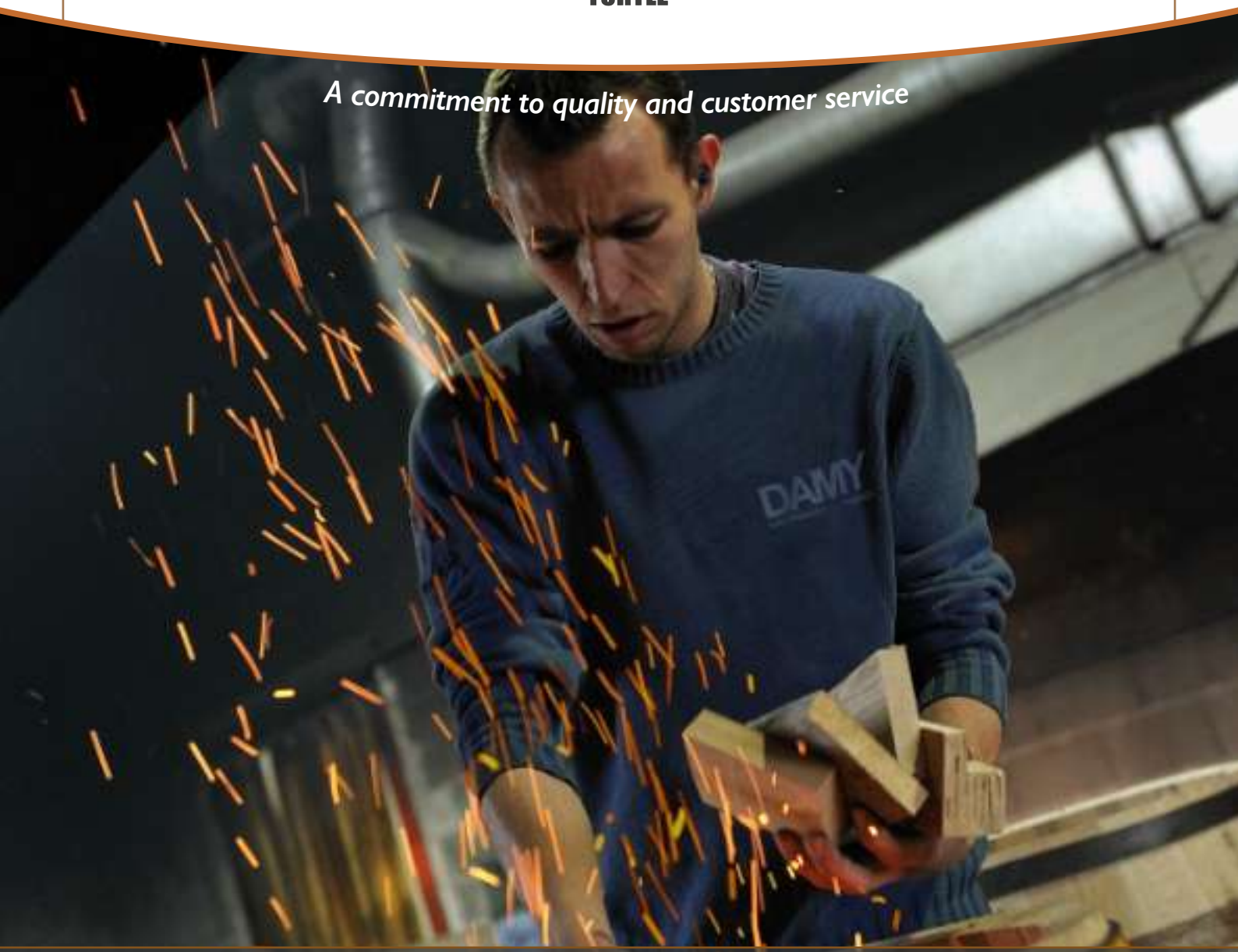

www.bouchardcooperages.com • 08 8346 2644 • enquiries@bouchardcooperages.com